DSC1001/3/4

1.8V-3.3V Low-Power Precision CMOS Oscillators

Features

- Frequency Range: 1 MHz to 150 MHz
- Exceptional Stability over Temperature
  - ±10 ppm, ±20 ppm, ±25 ppm, ±50 ppm
- Operating Voltage
  - 1.7 to 3.6V
- Operating Temperature Range
  - Ext. Industrial –40°C to 105°C
  - Industrial –40°C to 85°C
  - Commercial –20°C to 70°C
- Low Operating and Standby Current
  - 6 mA Operating (1 MHz)
  - 15 µA Standby (Max.)
- Ultra Miniature Footprint
  - 2.5 mm x 2.0 mm x 0.85 mm
  - 3.2 mm x 2.5 mm x 0.85 mm
  - 5.0 mm x 3.2 mm x 0.85 mm
  - 7.0 mm x 5.0 mm x 0.85 mm
- MIL-STD 883 Shock and Vibration Resistant
- Pb Free, RoHS, Reach SVHC Compliant
- For AEC-Q100 Qualified, Refer to DSA10xx Family

Applications

- Mobile Applications
- Consumer Electronics
- Portable Electronics
- DVR, CCTV, Surveillance Cameras
- Low Profile Applications
- Industrial Applications

Benefits

- Pin for Pin “Drop-In” Replacement for Industry Standard Oscillators
- Semiconductor Level Reliability, Significantly Higher than Quartz
- Short Mass Production Lead Times
- Longer Battery Life/Reduced Power Consumption
- Compact Plastic Package
- Cost Effective

General Description

The DSC1001/3/4 is a silicon MEMS based CMOS family of oscillators that offers excellent jitter and stability performance over a wide range of supply voltages and temperatures. The device operates from 1 MHz to 150 MHz with supply voltages between 1.8 to 3.3 volts and temperature ranges up to –40°C to 105°C.

The DSC1001/3/4 incorporate an all silicon resonator that is extremely robust and nearly immune to stress related fractures, common to crystal based oscillators. Without sacrificing the performance and stability required of today’s systems, a crystal-less design allows for a higher level of reliability, making the DSC1001/3/4 ideal for rugged, industrial, and portable applications where stress, shock, and vibration can damage quartz crystal based systems.

Available in industry standard packages, the DSC1001/3/4 can be “dropped-in” to the same PCB footprint as standard crystal oscillators.

The DSC1003 and DSC1004 have the same functionality and performance as the DSC1001, but feature higher output drives of 25 pF and 40 pF, respectively.

Package Types

DSC1001/3/4
4-Lead VDFN
(Top View)

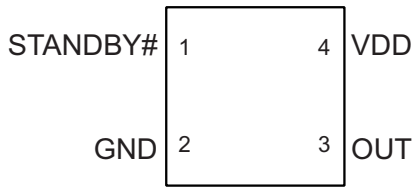

© 2017 - 2026 Microchip Technology Inc. and its subsidiaries

Block Diagram

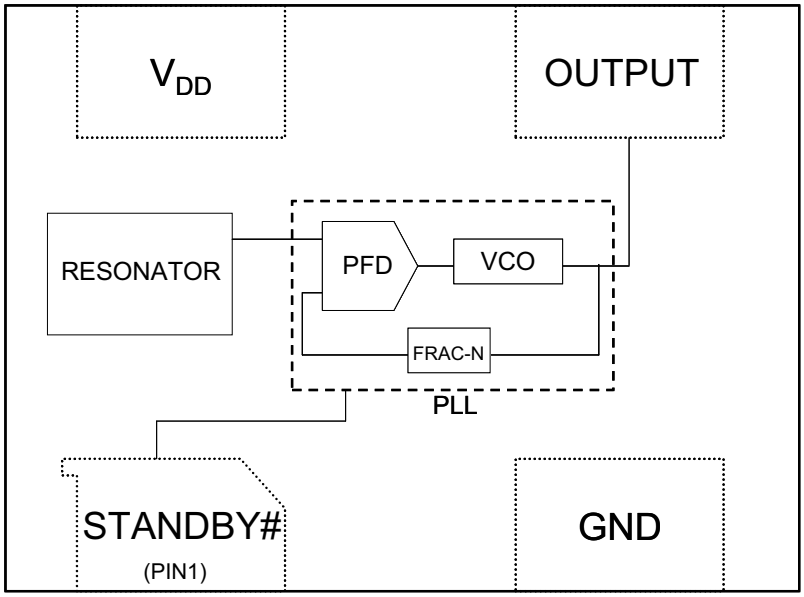

© 2017 - 2026 Microchip Technology Inc. and its subsidiaries

1.0 ELECTRICAL CHARACTERISTICS

Absolute Maximum Ratings †

Input Voltage (V_{IN}) ..... –0.3V to V_{DD} + 0.3V
ESD Protection ..... 4 kV HBM, ±200V MM, 1.5 kV CDM

Recommended Operating Conditions

Supply Voltage (V_{DD}) ..... +1.7V to +3.6V
Output Load (Z_L) ..... R > 10 kΩ, C ≤ 15 pF

† Notice: Stresses above those listed under "Absolute Maximum Ratings" may cause permanent damage to the device. This is a stress rating only and functional operation of the device at those or any other conditions above those indicated in the operational sections of this specification is not intended. Exposure to maximum rating conditions for extended periods may affect device reliability.

TABLE 1-1: DC CHARACTERISTICS

Electrical Characteristics: V_{DD} = 1.8 to 3.3V; T_A = +85°C unless otherwise specified.

Parameters	Sym.	Min.	Typ.	Max.	Units	Conditions
Frequency	F_0	1	—	150	MHz	Single Frequency
Frequency Tolerance	Δf	—	—	±10	ppm	Includes frequency variations due to initial tolerance, temperature and power supply voltage
		—	—	±20		
		—	—	±25		
		—	—	±50		
Aging	Δf	—	—	±5	ppm	1 year @ +25°C
Supply Current, Standby	I_{DD}	—	—	15	µA	T = +25°C
Output Startup Time (Note 1)	t_{SU}	—	1.0	1.3	ms	T = +25°C
Output Disable Time	t_{DA}	—	20	100	ns	—
Output Duty Cycle	SYM	45	—	55	%	—
Input Logic Level High	V_{IH}	0.75 x V_{DD}	—	—	V	—
Input Logic Level Low	V_{IL}	—	—	0.25 x V_{DD}	V	—
V_{DD} = 1.8V						
Supply Current, No Load	I_{DD}	—	6.0	6.3	mA	1 MHz; C_L = 0 pF, R_L = ∞, T = +25°C
		—	6.5	7.1		27 MHz
		—	7.2	8.5		70 MHz
		—	8.3	11.9		150 MHz
Output Logic Level High	V_{OH}	0.8 x V_{DD}	—	—	V	–6 mA, DSC1004, C_L = 40 pF
		0.8 x V_{DD}	—	—		–6 mA, DSC1003, C_L = 25 pF
		0.8 x V_{DD}	—	—		–4 mA, DSC1001, C_L = 15 pF
Output Logic Level Low	V_{OL}	—	—	0.2 x V_{DD}	V	6 mA, DSC1004, C_L = 40 pF
		—	—	0.2 x V_{DD}		6 mA, DSC1003, C_L = 25 pF
		—	—	0.2 x V_{DD}		4 mA, DSC1001, C_L = 15 pF

Note 1: t_{SU} is time to stable output frequency after V_{DD} is applied. t_{SU} and t_{EN} (after EN is asserted) are identical values.

2: Measured over 50k clock cycles.

© 2017 - 2026 Microchip Technology Inc. and its subsidiaries

TABLE 1-1: DC CHARACTERISTICS (CONTINUED)

Electrical Characteristics: V_{DD} = 1.8 to 3.3V; T_A = +85°C unless otherwise specified.

Parameters	Sym.	Min.	Typ.	Max.	Units	Conditions	
Output Transition Rise Time	t_R	—	1.4	3.0	ns	DSC1001, C_L = 15 pF	T = +25°C, 20% to 80%
		—	1.5	3.0		DSC1003, C_L = 25 pF	
		—	1.8	3.0		DSC1004, C_2 = 40 pF	
Output Transition Fall Time	t_F	—	1.0	3.0	ns	DSC1001, C_L = 15 pF	T = +25°C, 20% to 80%
		—	1.1	3.0		DSC1003, C_L = 25 pF	
		—	1.2	3.0		DSC1004, C_2 = 40 pF	
Jitter, Max. Cycle-to-Cycle	J_{CC}	—	60	—	ps	f = 100 MHz (Note 2)	
Period Jitter	J_P	—	10	15	ps_{RMS}	f = 100 MHz (Note 2)	
V_{DD} = 2.5V							
Supply Current, No Load	I_{DD}	—	6.0	6.4	mA	1 MHz	C_L = 0 pF, R_L = ∞, T = +25°C
		—	6.7	7.5		27 MHz	
		—	7.7	9.4		70 MHz	
		—	9.6	13.9		150 MHz	
Output Logic Level High	V_{OH}	0.9 x V_{DD}	—	—	V	–6 mA, DSC1004, C_L = 40 pF	
		0.8 x V_{DD}	—	—		–6 mA, DSC1003, C_L = 25 pF	
		0.8 x V_{DD}	—	—		–4 mA, DSC1001, C_L = 15 pF	
Output Logic Level Low	V_{OL}	—	—	0.1 x V_{DD}	V	6 mA, DSC1004, C_L = 40 pF	
		—	—	0.2 x V_{DD}		6 mA, DSC1003, C_L = 25 pF	
		—	—	0.2 x V_{DD}		4 mA, DSC1001, C_L = 15 pF	
Output Transition Rise Time	t_R	—	1.0	2.0	ns	DSC1001, C_L = 15 pF	T = +25°C, 20% to 80%
		—	1.1	2.0		DSC1003, C_L = 25 pF	
		—	1.2	2.0		DSC1004, C_2 = 40 pF	
Output Transition Fall Time	t_F	—	0.9	2.0	ns	DSC1001, C_L = 15 pF	T = +25°C, 20% to 80%
		—	1.0	2.0		DSC1003, C_L = 25 pF	
		—	1.1	2.0		DSC1004, C_2 = 40 pF	

Note 1: t_{SU} is time to stable output frequency after V_{DD} is applied. t_{SU} and t_{EN} (after EN is asserted) are identical values.

2: Measured over 50k clock cycles.

© 2017 - 2026 Microchip Technology Inc. and its subsidiaries

TABLE 1-1: DC CHARACTERISTICS (CONTINUED)

Electrical Characteristics: V_{DD} = 1.8 to 3.3V; T_A = +85°C unless otherwise specified.

Parameters	Sym.	Min.	Typ.	Max.	Units	Conditions	
Jitter, Max. Cycle-to-Cycle	J_{CC}	—	50	—	ps	f = 100 MHz (Note 2)	
Period Jitter	J_P	—	5	10	ps_{RMS}	f = 100 MHz (Note 2)	
V_{DD} = 3.3V							
Supply Current, No Load	I_{DD}	—	6.0	6.5	mA	1 MHz	C_L = 0 pF, R_L = ∞, T = +25°C
		—	6.8	8.0		27 MHz	
		—	8.2	10.5		70 MHz	
		—	10.8	16.6		150 MHz	
Output Logic Level High	V_{OH}	0.9 x V_{DD}	—	—	V	–8 mA, DSC1004, C_L = 40 pF	
		0.9 x V_{DD}	—	—		–6 mA, DSC1003, C_L = 25 pF	
		0.8 x V_{DD}	—	—		–4 mA, DSC1001, C_L = 15 pF	
Output Logic Level Low	V_{OL}	—	—	0.1 x V_{DD}	V	8 mA, DSC1004, C_L = 40 pF	
		—	—	0.1 x V_{DD}		6 mA, DSC1003, C_L = 25 pF	
		—	—	0.2 x V_{DD}		4 mA, DSC1001, C_L = 15 pF	
Output Transition Rise Time	t_R	—	1.0	2.0	ns	DSC1001, C_L = 15 pF	T = +25°C, 20% to 80%
		—	1.1	2.0		DSC1003, C_L = 25 pF	
		—	1.2	2.0		DSC1004, C_2 = 40 pF	
Output Transition Fall Time	t_F	—	0.9	2.0	ns	DSC1001, C_L = 15 pF	T = +25°C, 20% to 80%
		—	1.0	2.0		DSC1003, C_L = 25 pF	
		—	1.1	2.0		DSC1004, C_2 = 40 pF	
Jitter, Max. Cycle-to-Cycle	J_{CC}	—	50	—	ps	f = 100 MHz (Note 2)	
Period Jitter	J_P	—	5	10	ps_{RMS}	f = 100 MHz (Note 2)	

Note 1: t_{SU} is time to stable output frequency after V_{DD} is applied. t_{SU} and t_{EN} (after EN is asserted) are identical values.

2: Measured over 50k clock cycles.

© 2017 - 2026 Microchip Technology Inc. and its subsidiaries

TEMPERATURE SPECIFICATIONS (Note 1)

Parameters	Sym.	Min.	Typ.	Max.	Units	Conditions
Temperature Ranges						
Operating Temperature Range	T_A	–40	—	+105	°C	Ordering Option L
		–40	—	+85	°C	Ordering Option I
		–20	—	+70	°C	Ordering Option E
Junction Operating Temperature	T_J	—	—	+125	°C	—
Storage Temperature Range	T_A	–55	—	+150	°C	—
Soldering Temperature Range	T_S	—	—	+260	°C	40 sec. max

Note 1: The maximum allowable power dissipation is a function of ambient temperature, the maximum allowable junction temperature and the thermal resistance from junction to air (i.e., T_A, T_J, θ_{JA}). Exceeding the maximum allowable power dissipation will cause the device operating junction temperature to exceed the maximum +125°C rating. Sustained junction temperatures above +125°C can impact the device reliability.

© 2017 - 2026 Microchip Technology Inc. and its subsidiaries

2.0 PIN DESCRIPTIONS

The descriptions of the pins are listed in Table 2-1 and Table 2-2.

TABLE 2-1: VDFN PACKAGE PIN FUNCTION TABLE

Pin Number	Symbol	Description
1	STANDBY#	Standby input (see the Standby Function section)
2	GND	Power supply ground
3	OUT	Oscillator output
4	VDD	Positive power supply

TABLE 2-2: 7 MM X 5 MM VDFN PACKAGE PIN FUNCTION TABLE

Pin Number	Symbol	Description
1	STANDBY#	Standby input (see the Standby Function section)
2	GND	Power supply ground
3	OUT	Oscillator output
4	VDD	Positive power supply
Center Pad	NC	Tie to GND or do not connect.

© 2017 - 2026 Microchip Technology Inc. and its subsidiaries

3.0 NOMINAL PERFORMANCE CHARACTERISTICS

Note: The graphs and tables provided following this note are a statistical summary based on a limited number of samples and are provided for informational purposes only. The performance characteristics listed herein are not tested or guaranteed. In some graphs or tables, the data presented may be outside the specified operating range (e.g., outside specified power supply range) and therefore outside the warranted range.

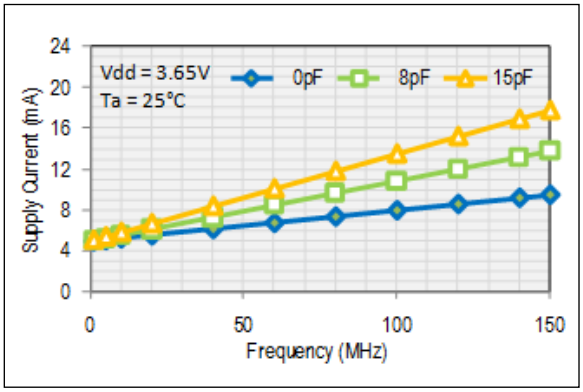

FIGURE 3-1: *Supply Current.*

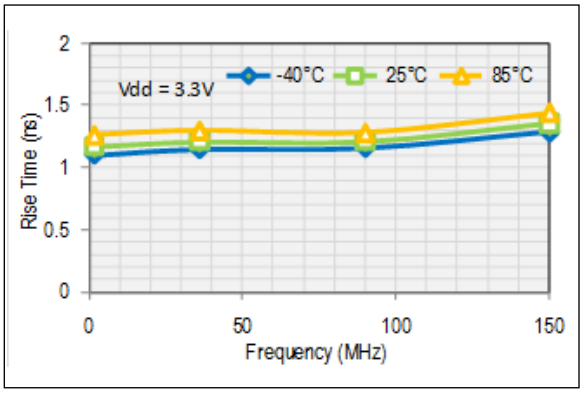

FIGURE 3-2: *Rise Time.*

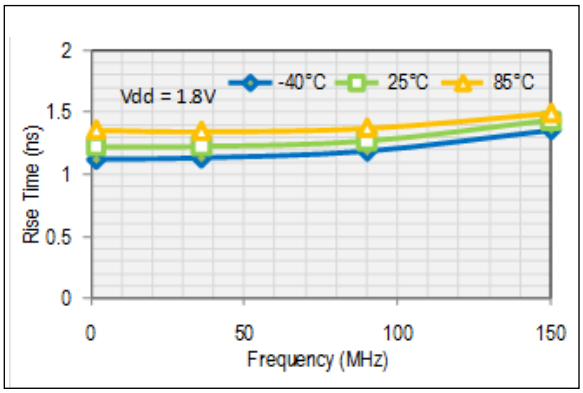

FIGURE 3-3: *Rise Time.*

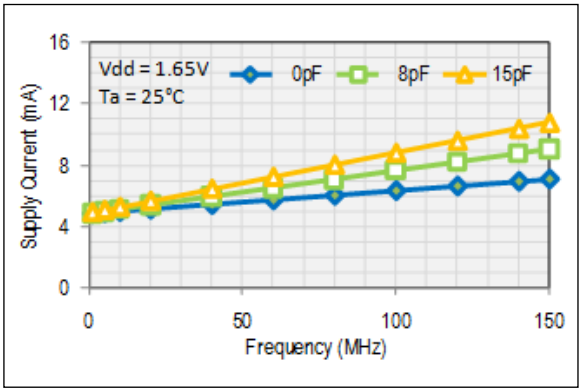

FIGURE 3-4: *Supply Current.*

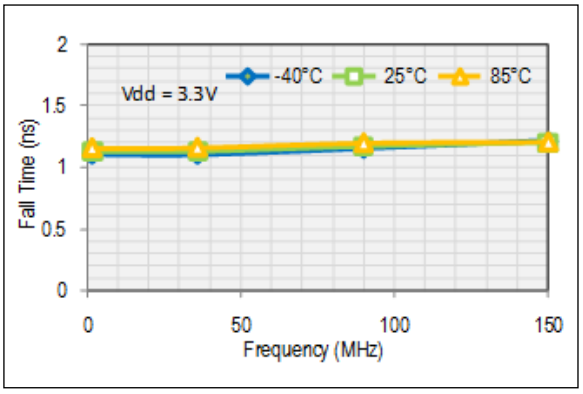

FIGURE 3-5: *Fall Time.*

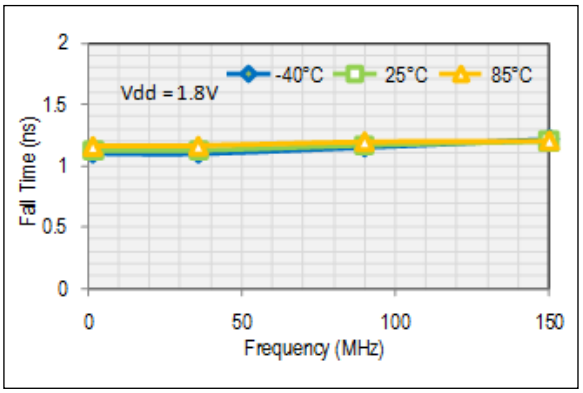

FIGURE 3-6: *Fall Time.*

© 2017 - 2026 Microchip Technology Inc. and its subsidiaries

4.0 OUTPUT WAVEFORM

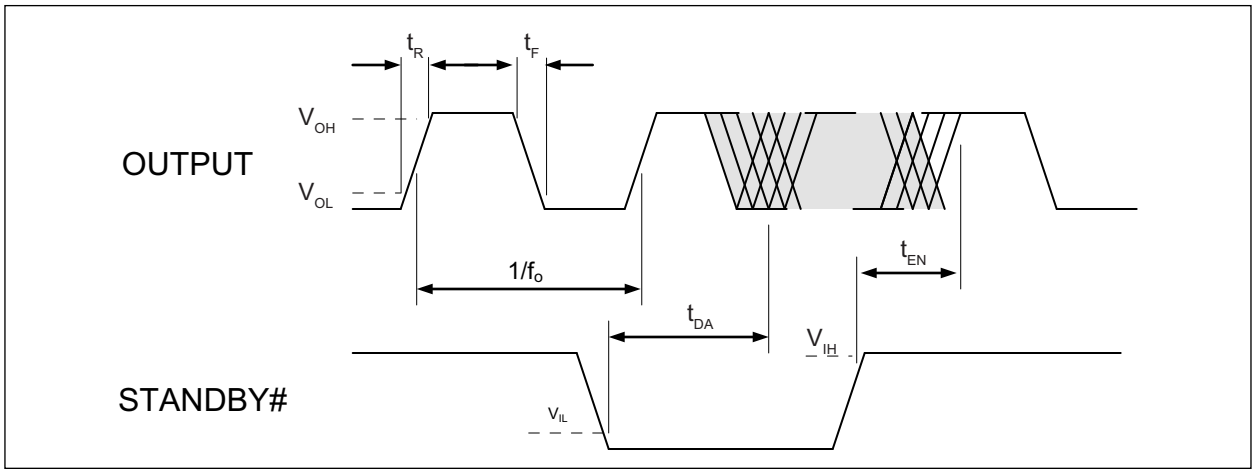

FIGURE 4-1: *Output Waveform.*

4.1 Standby Function

Standby# (Pin 1)	Output (Pin 3)
High Level	Output ON
Open (no connect)	Output ON
Low Level	High Impedance

5.0 TEST CIRCUIT

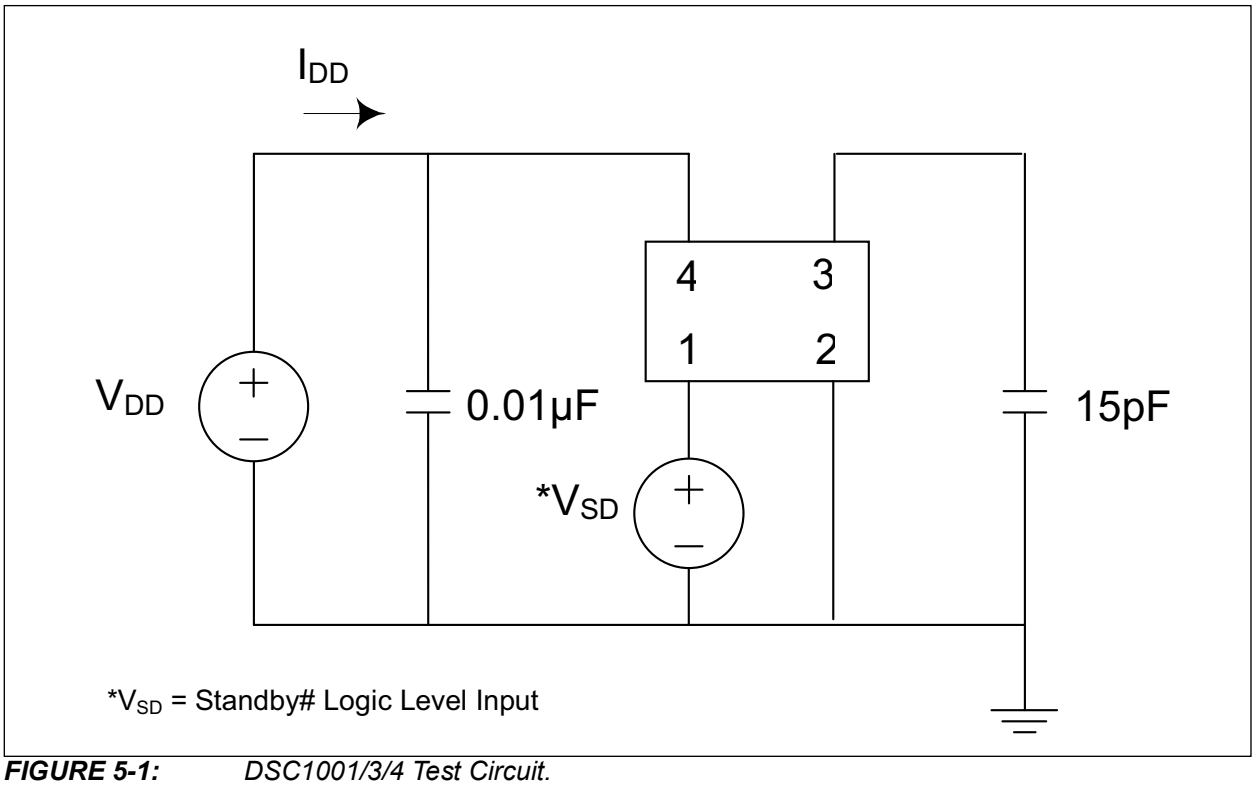

FIGURE 5-1: *DSC1001/3/4 Test Circuit.*

© 2017 - 2026 Microchip Technology Inc. and its subsidiaries

6.0 BOARD LAYOUT (RECOMMENDED)

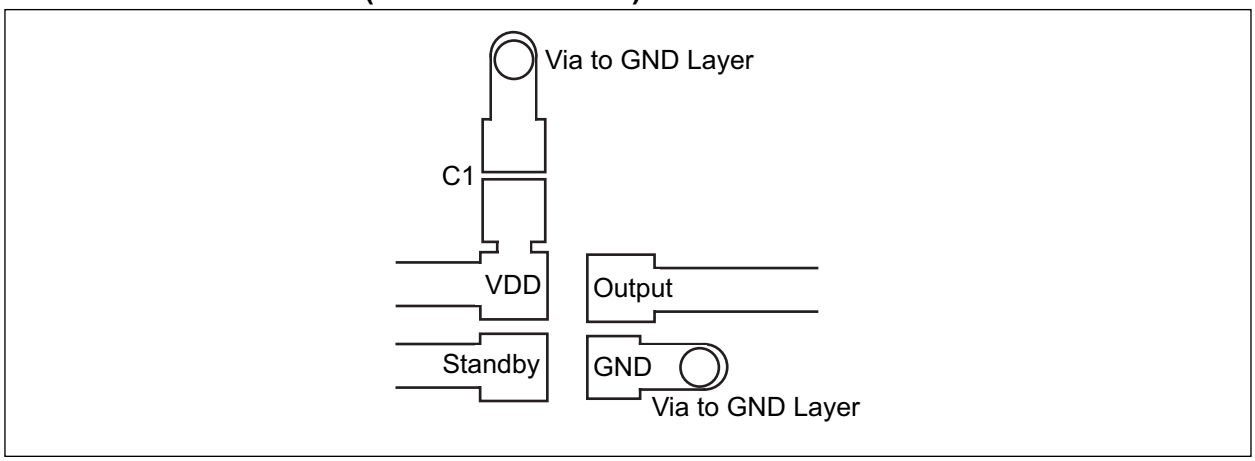

FIGURE 6-1: *Recommended Board Layout for DSC1001/3/4.*

7.0 SOLDER REFLOW PROFILE

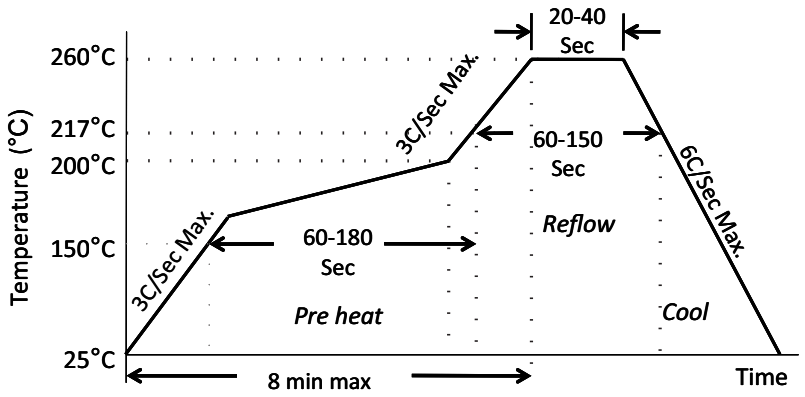

FIGURE 7-1: *Solder Reflow Profile.*

MSL 1 @ 260°C refer to JSTD-020C	
Ramp-Up Rate (200°C to Peak Temp)	3°C/sec. max.
Preheat Time 150°C to 200°C	60 to 180 sec.
Time maintained above 217°C	60 to 150 sec.
Peak Temperature	255°C to 260°C
Time within 5°C of Actual Peak	20 to 40 sec.
Ramp-Down Rate	6°C/sec. max.
Time 25°C to Peak Temperature	8 minutes max.

© 2017 - 2026 Microchip Technology Inc. and its subsidiaries

8.0 PACKAGING INFORMATION

8.1 Package Marking Information

4-Lead VDFN*	Example
XXXXXX XXXYYWW 0SSS ●	0400000 DAP2319 0BD2 ●

Legend:	XX...X	Product code, customer-specific information, or frequency in MHz without printed decimal point
	Y	Year code (last digit of calendar year)
	YY	Year code (last 2 digits of calendar year)
	WW	Week code (week of January 1 is week ‘01’)
	SSS	Alphanumeric traceability code
	(e3)	Pb-free JEDEC® designator for Matte Tin (Sn)
	*	This package is Pb-free. The Pb-free JEDEC designator ((e3)) can be found on the outer packaging for this package.
	●, ▲, ▼	Pin one index is identified by a dot, delta up, or delta down (triangle mark).
Note:	In the event the full Microchip part number cannot be marked on one line, it will be carried over to the next line, thus limiting the number of available characters for customer-specific information. Package may or may not include the corporate logo. Underbar (_) and/or Overbar (¯) symbol may not be to scale.	

Note: Devices may not include a top-line frequency marking. Product identity and output frequency are defined by the ordering code and accompanying documentation. Devices without a frequency marking remain fully compliant with all applicable datasheet specifications.

4-Lead Very Thin Dual Flatpack, No Lead Package (JZA) - 7x5x0.9 mm Body [VDFN] With 2.2x3.5 mm Exposed Pad

Note: For the most current package drawings, please see the Microchip Packaging Specification located at http://www.microchip.com/packaging

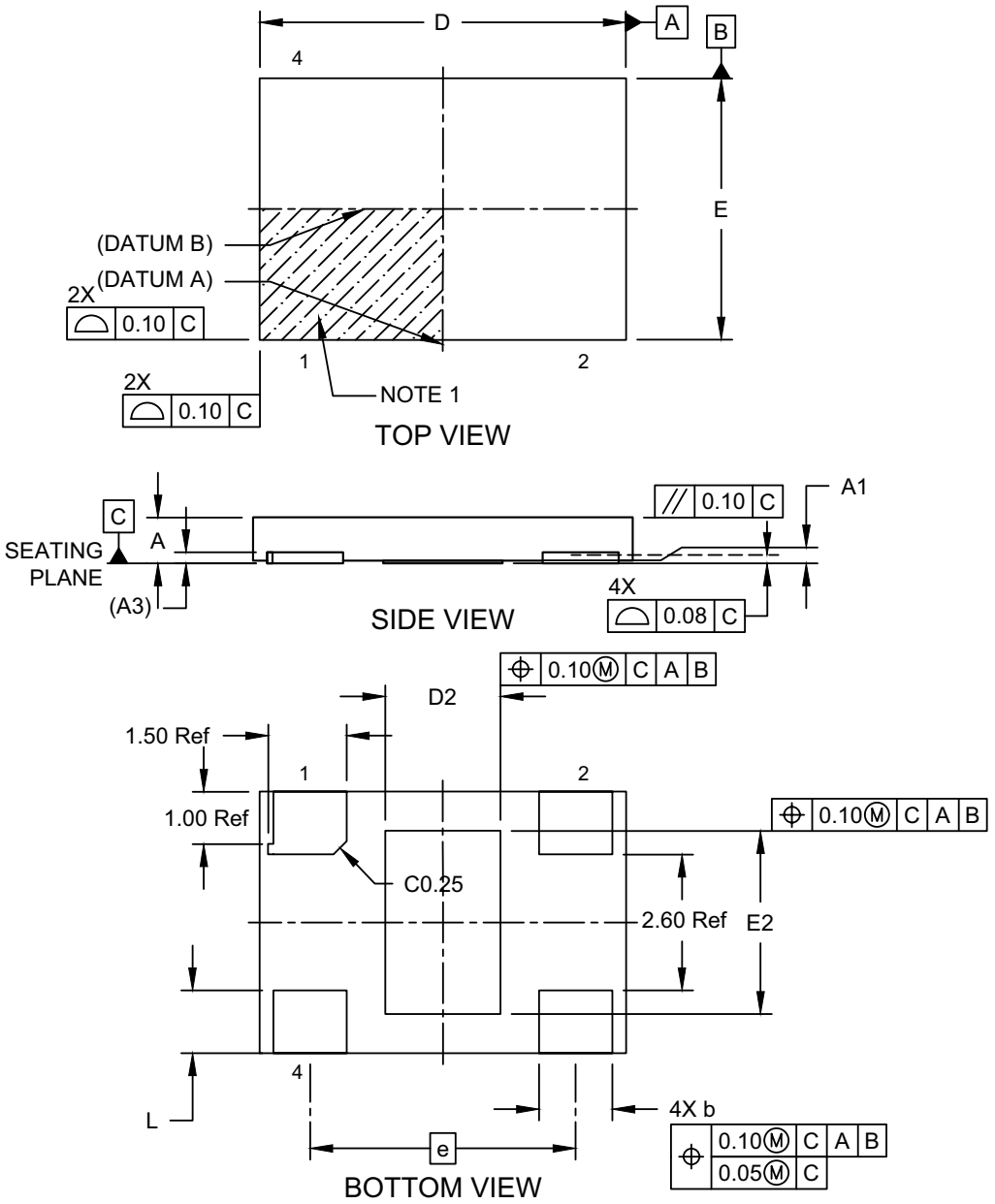

Microchip Technology Drawing C04-1025-JZA Rev B Sheet 1 of 2

© 2024 Microchip Technology Inc.

© 2017 - 2026 Microchip Technology Inc. and its subsidiaries

4-Lead Very Thin Dual Flatpack, No Lead Package (JZA) - 7x5x0.9 mm Body [VDFN] With 2.2x3.5 mm Exposed Pad

Note: For the most current package drawings, please see the Microchip Packaging Specification located at http://www.microchip.com/packaging

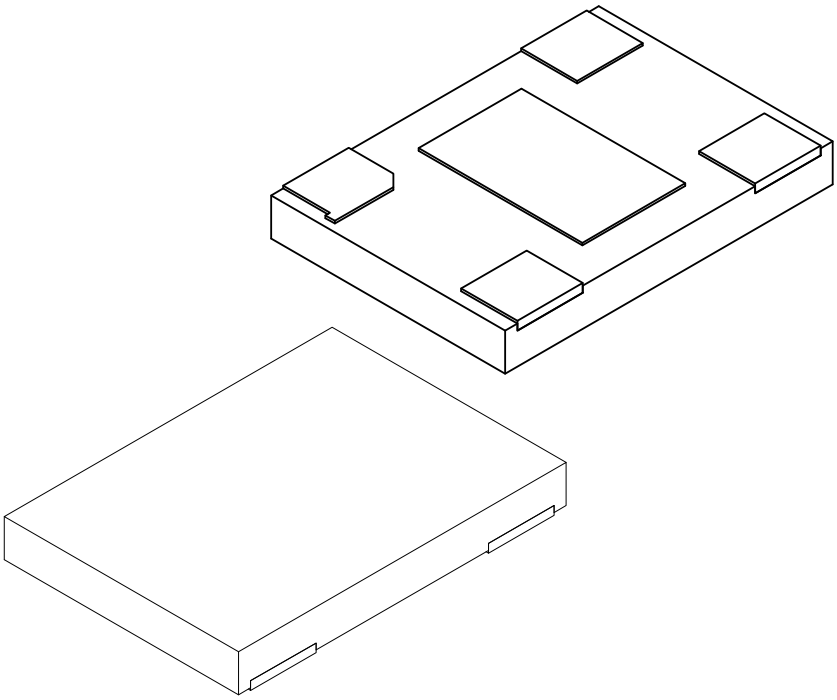

Units		MILLIMETERS		
Dimension Limits		MIN	NOM	MAX
Number of Terminals	N	004		
Pitch	e	5.08 Ref		
Overall Height	A	0.80	0.85	0.90
Standoff	A1	0.00	-	0.05
Terminal Thickness	A3	0.203 Ref		
Overall Length	D	6.90	7.00	7.10
Exposed Pad Length	D2	2.10	2.20	2.30
Overall Width	E	4.90	5.00	5.10
Exposed Pad Width	E2	3.40	3.50	3.60
Terminal Width	b	1.35	1.40	1.45
Terminal Length	L	1.10	1.20	1.30

Notes:

1. Pin 1 visual index feature may vary, but must be located within the pin 1 area.
2. Package is saw singulated
3. Dimensioning and tolerancing per ASME Y14.5M
   BSC: Basic Dimension. Theoretically exact value shown without tolerances.
   REF: Reference Dimension, usually without tolerance, for information purposes only.

Microchip Technology Drawing C04-1025-JZA Rev B Sheet 2 of 2

© 2024 Microchip Technology Inc.

4-Lead Very Thin Dual Flatpack, No Lead Package [JZA] - 7x5x0.9 mm Body [VDFN] With 2.2x3.5 mm Exposed Pad

Note: For the most current package drawings, please see the Microchip Packaging Specification located at http://www.microchip.com/packaging

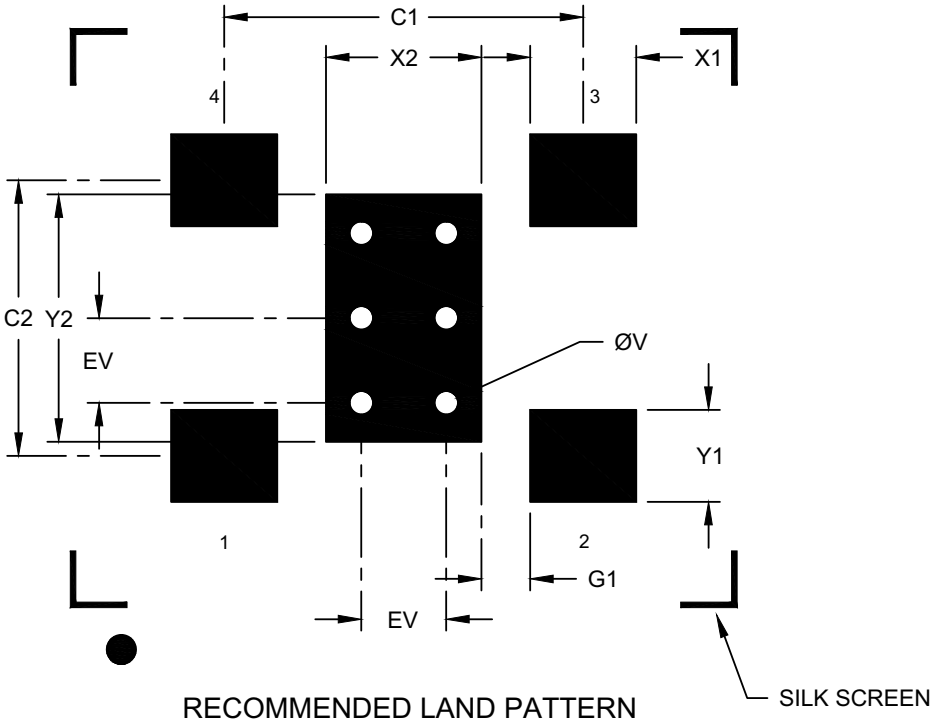

RECOMMENDED LAND PATTERN

Units		MILLIMETERS		
Dimension Limits		MIN	NOM	MAX
Optional Center Pad Width	X2			2.30
Optional Center Pad Length	Y2			3.60
Contact Pad Spacing	C1		5.08	
Contact Pad Spacing	C2		3.90	
Contact Pad Width (Xnn)	X1			1.50
Contact Pad Length (Xnn)	Y1			1.30
Contact Pad to Center Pad (Xnn)	G1	0.69		
Thermal Via Diameter	V		0.33	
Thermal Via Pitch	EV		1.20	

Notes:

1. Dimensioning and tolerancing per ASME Y14.5M
   BSC: Basic Dimension. Theoretically exact value shown without tolerances.
2. For best soldering results, thermal vias, if used, should be filled or tented to avoid solder loss during reflow process

Microchip Technology Drawing C04-3025-JZA Rev B

© 2024 Microchip Technology Inc.

© 2017 - 2026 Microchip Technology Inc. and its subsidiaries

4-Lead Very Thin Plastic Dual Flat, No Lead Package (H6A) - 5x3.2 mm Body [VDFN]

Note: For the most current package drawings, please see the Microchip Packaging Specification located at http://www.microchip.com/packaging

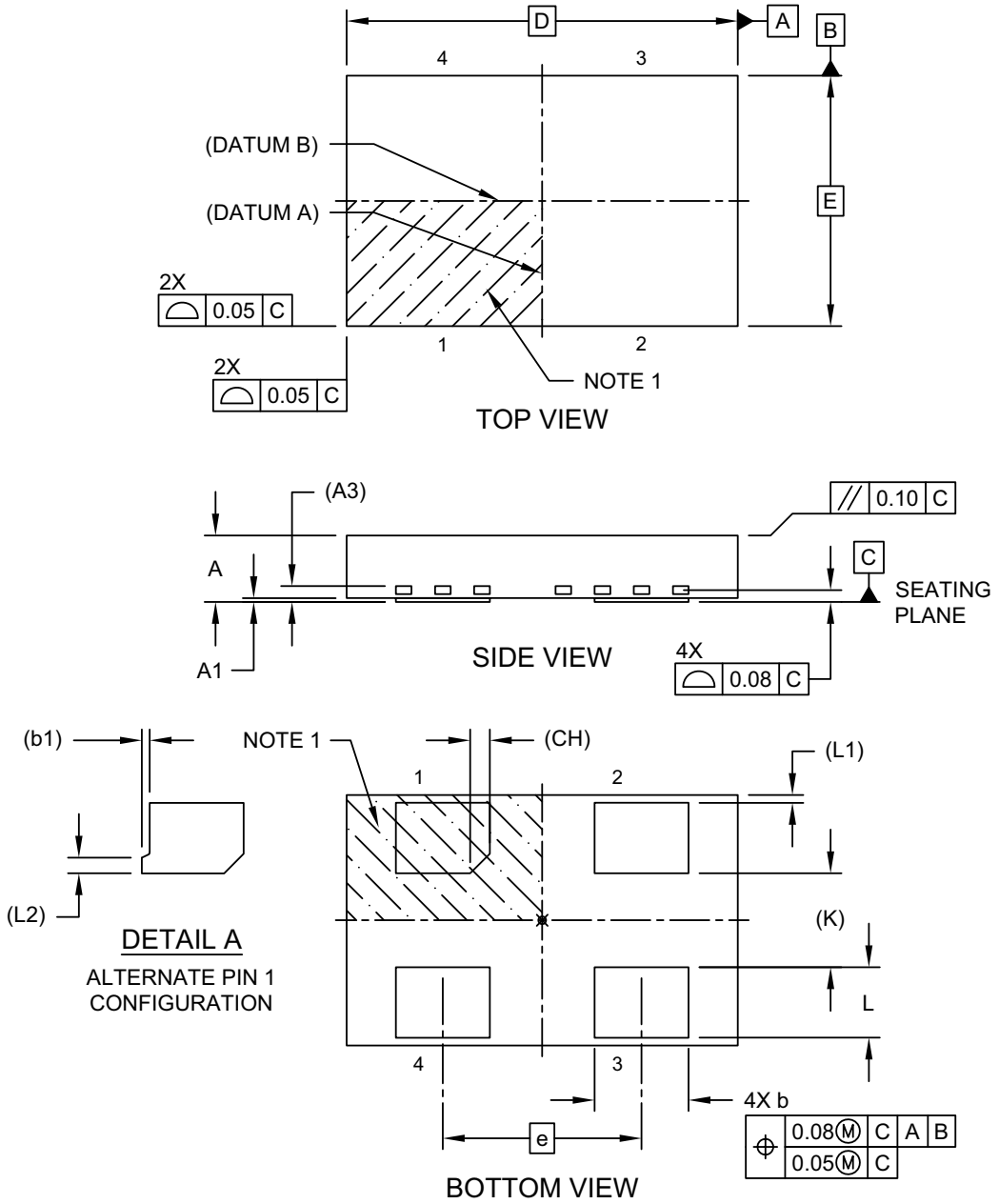

Microchip Technology Drawing C04-1008-H6A Rev C Sheet 1 of 2

4-Lead Very Thin Plastic Dual Flat, No Lead Package (H6A) - 5x3.2 mm Body [VDFN]

Note: For the most current package drawings, please see the Microchip Packaging Specification located at http://www.microchip.com/packaging

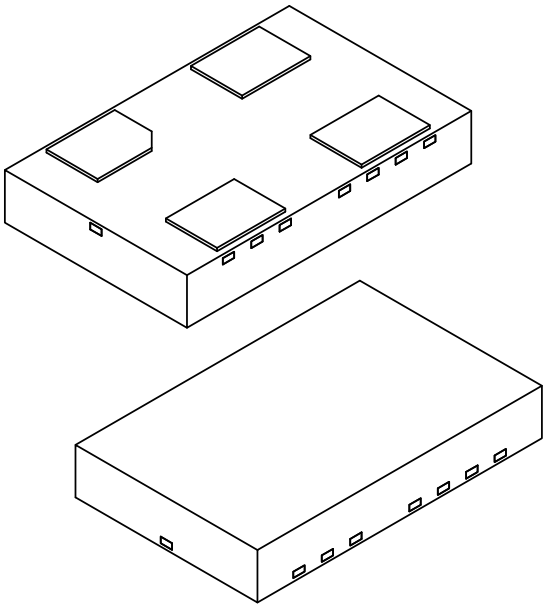

Units		MILLIMETERS		
Dimension Limits		MIN	NOM	MAX
Number of Terminals	N	4		
Pitch	e	2.54 BSC		
Overall Height	A	0.80	0.85	0.90
Standoff	A1	0.00	0.02	0.05
Terminal Thickness	A3	0.20 REF		
Overall Length	D	5.00 BSC		
Overall Width	E	3.20 BSC		
Terminal Width	b	1.15	1.20	1.25
Terminal 1 Tab	b1	0.10 REF		
Terminal Length	L	0.80	0.90	1.00
Terminal Pull Back	L1	0.10 REF		
Terminal 1 Tab	L2	0.20 REF		
Terminal 1 Chamfer	CH	0.25 REF		
Terminal Spacing	K	1.20 REF		

Notes:

1. Pin 1 visual index feature may vary, but must be located within the hatched area.
2. Package is saw singulated
3. Dimensioning and tolerancing per ASME Y14.5M
   BSC: Basic Dimension. Theoretically exact value shown without tolerances.
   REF: Reference Dimension, usually without tolerance, for information purposes only.

Microchip Technology Drawing C04-1008-H6A Rev C Sheet 2 of 2

© 2017 - 2026 Microchip Technology Inc. and its subsidiaries

4-Lead Very Thin Plastic Dual Flat, No Lead Package (H6A) - 5x3.2 mm Body [VDFN]

Note: For the most current package drawings, please see the Microchip Packaging Specification located at http://www.microchip.com/packaging

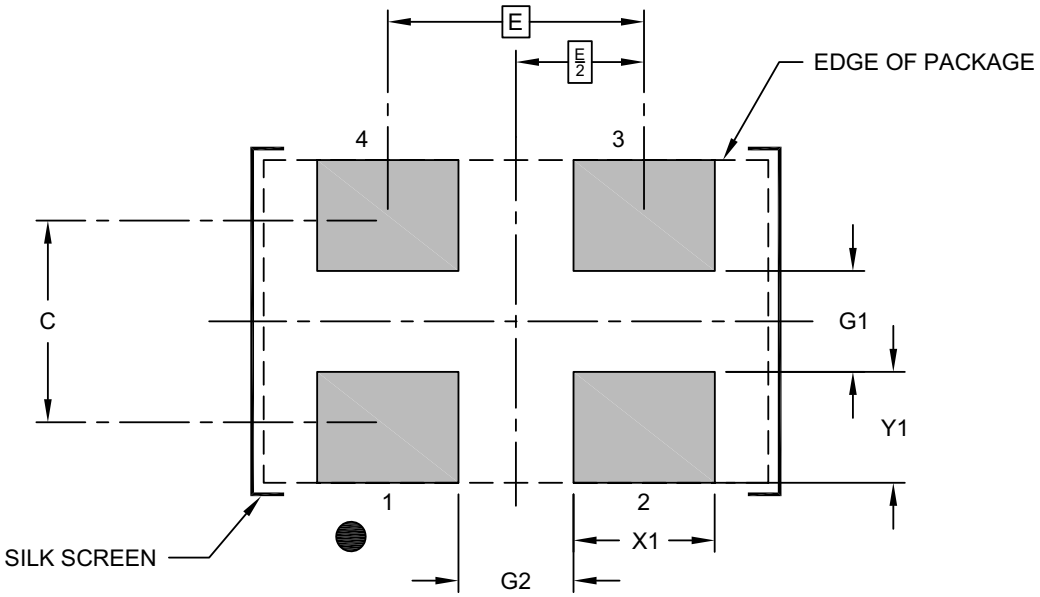

RECOMMENDED LAND PATTERN

Units		MILLIMETERS		
Dimension Limits		MIN	NOM	MAX
Contact Pitch	E		2.54	
Contact Pad Spacing	C		2.00	
Contact Pad Width (X4)	X1			1.40
Contact Pad Length (X4)	Y1			
Contact Pad to Center Pad (X2)	G1	1.00		1.10
Contact Pad to Contact Pad (X2)	G2	1.14		
Terminal 1 Contact Pad Chamfer	CH		0.30	

Notes:

1. Dimensioning and tolerancing per ASME Y14.5M
   BSC: Basic Dimension. Theoretically exact value shown without tolerances.

Microchip Technology Drawing C04-3008 Rev C

4-Lead Very Thin Plastic Dual Flatpack No-Lead (H4A) - 3.2x2.5 mm Body [VDFN]

Note: For the most current package drawings, please see the Microchip Packaging Specification located at http://www.microchip.com/packaging

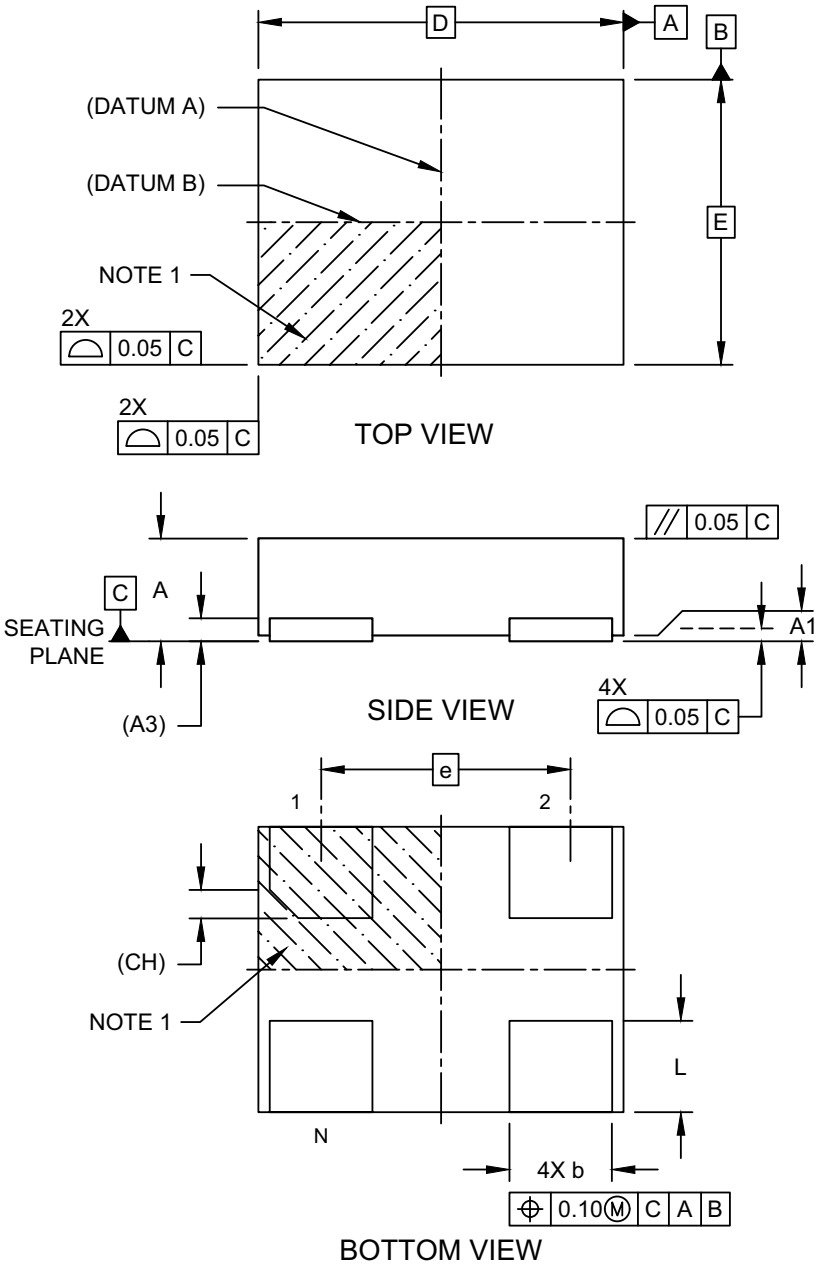

Microchip Technology Drawing C04-1006-H4A Rev C Sheet 1 of 2

© 2024 Microchip Technology Inc.

© 2017 - 2026 Microchip Technology Inc. and its subsidiaries

4-Lead Very Thin Plastic Dual Flatpack No-Lead (H4A) - 3.2x2.5 mm Body [VDFN]

Note: For the most current package drawings, please see the Microchip Packaging Specification located at http://www.microchip.com/packaging

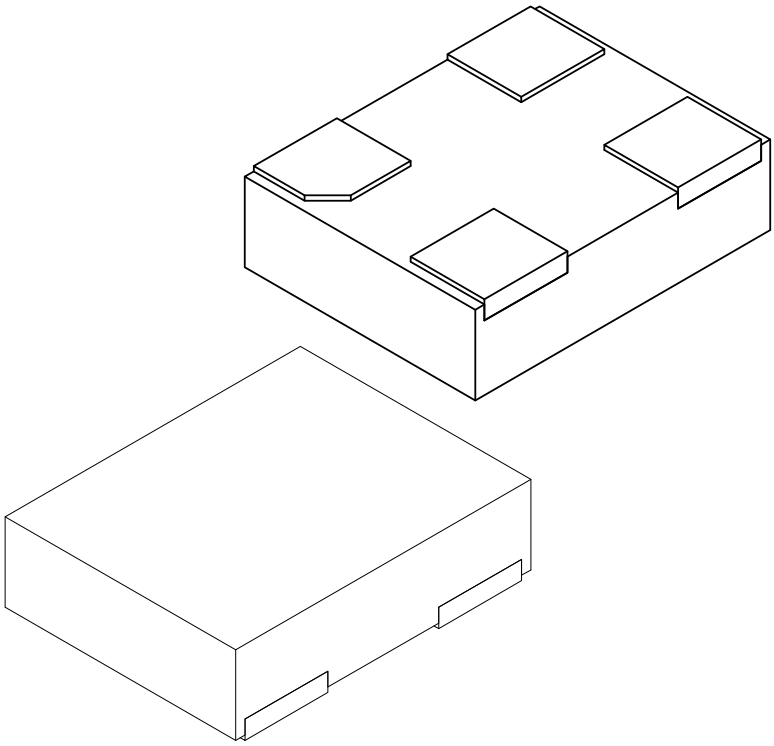

Units		MILLIMETERS		
Dimension Limits		MIN	NOM	MAX
Number of Terminals	N	4		
Pitch	e	2.10 BSC		
Overall Height	A	0.80	0.85	0.90
Standoff	A1	0.00	0.02	0.05
Overall Length	D	3.20 BSC		
Overall Width	E	2.50 BSC		
Terminal Width	b	0.85	0.90	0.95
Terminal Length	L	0.70	0.80	0.90
Terminal 1 Index Chamfer	CH	0.25 REF		

Notes:

1. Pin 1 visual index feature may vary, but must be located within the hatched area.
2. Package is saw singulated
3. Dimensioning and tolerancing per ASME Y14.5M
   BSC: Basic Dimension. Theoretically exact value shown without tolerances.
   REF: Reference Dimension, usually without tolerance, for information purposes only.

Microchip Technology Drawing C04-1006-H4A Rev C Sheet 2 of 2

© 2024 Microchip Technology Inc.

4-Lead Very Thin Plastic Dual Flatpack No-Lead (H4A) - 3.2x2.5 mm Body [VDFN]

Note: For the most current package drawings, please see the Microchip Packaging Specification located at http://www.microchip.com/packaging

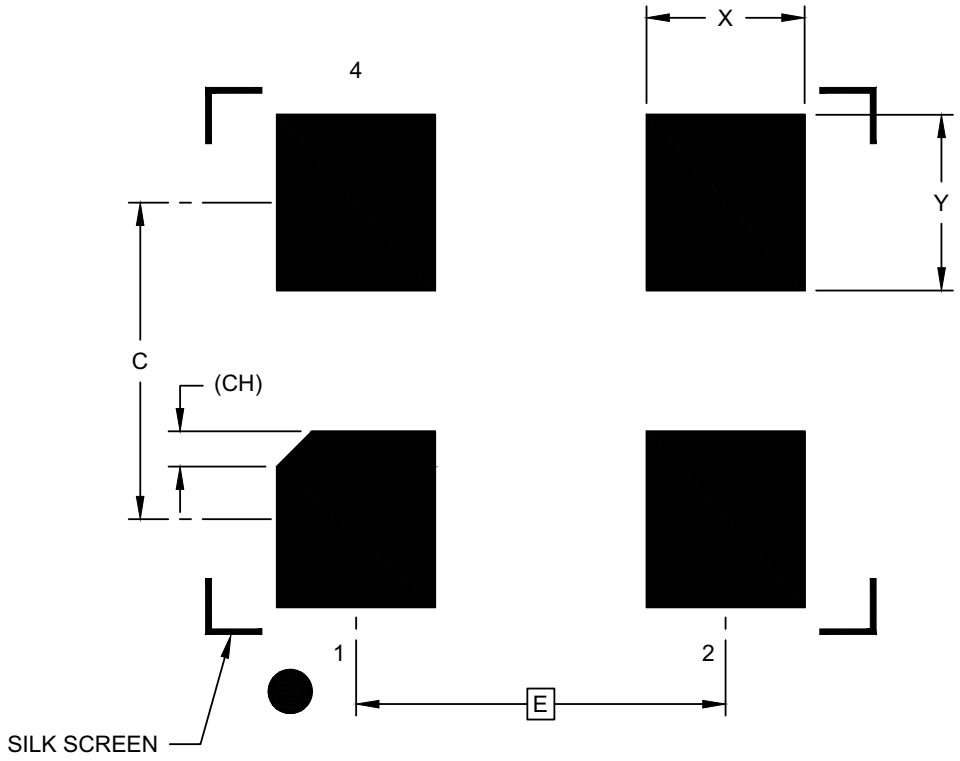

RECOMMENDED LAND PATTERN

Units		MILLIMETERS		
Dimension Limits		MIN	NOM	MAX
Contact Pitch	E	2.10 BSC		
Contact Pad Spacing	C		1.80	
Contact Pad Width (X4)	X			0.90
Contact Pad Length (X4)	Y			1.00
Contact 1 Index Chamfer	CH	0.20 REF		

Notes:

1. Dimensioning and tolerancing per ASME Y14.5M

   BSC: Basic Dimension. Theoretically exact value shown without tolerances.
   REF: Reference Dimension, usually without tolerance, for information purposes only.

Microchip Technology Drawing C04-3006-H4A Rev C

© 2024 Microchip Technology Inc.

© 2017 - 2026 Microchip Technology Inc. and its subsidiaries

4-Lead Very Thin Plastic Dual Flat, No Lead Package (J5A) - 2.5x2x0.9 mm Body [VDFN]
Micrel Legacy Package CDFN2520-4LD-PL-1

Note:	For the most current package drawings, please see the Microchip Packaging Specification located at http://www.microchip.com/packaging

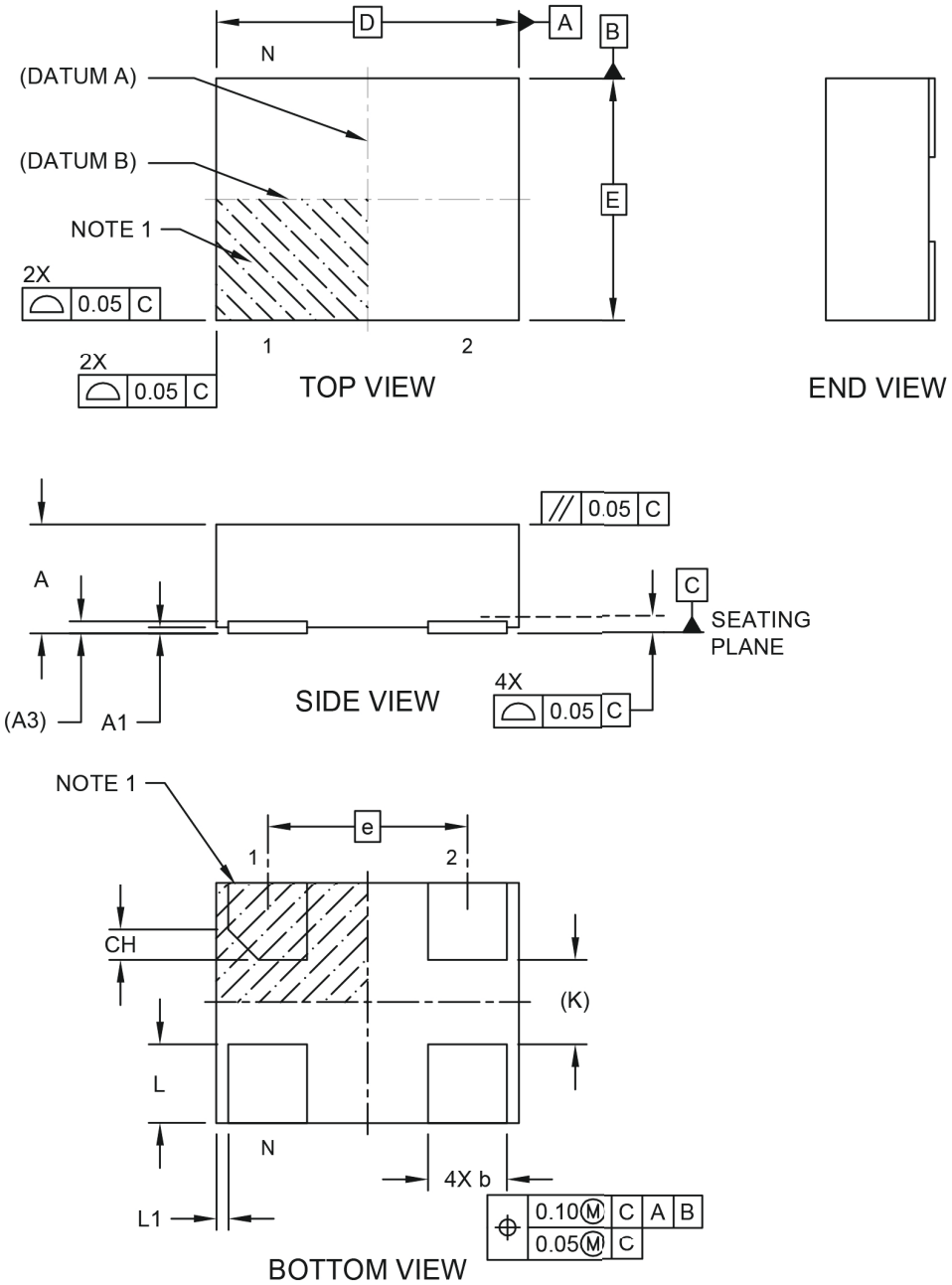

Microchip Technology Drawing C04-1004 Rev B Sheet 1 of 2

© 2020 Microchip Technology Inc.

4-Lead Very Thin Plastic Dual Flat, No Lead Package (J5A) - 2.5x2x0.9 mm Body [VDFN] Micrel Legacy Package CDFN2520-4LD-PL-1

Note: For the most current package drawings, please see the Microchip Packaging Specification located at http://www.microchip.com/packaging

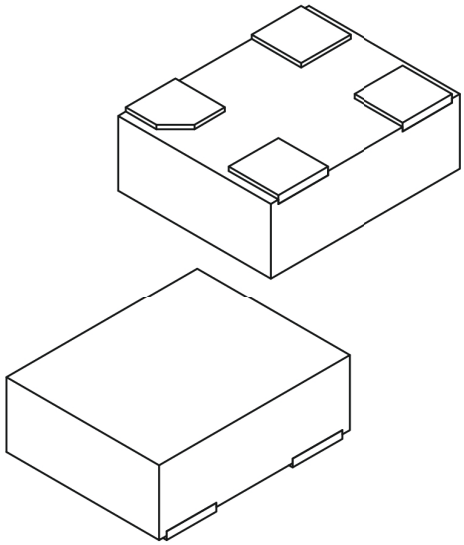

Units		MILLIMETERS		
Dimension Limits		MIN	NOM	MAX
Number of Terminals	N		4	
Pitch	e		1.65 BSC	
Overall Height	A	0.80	0.85	0.90
Standoff	A1	0.00	0.02	0.05
Terminal Thickness	A3		0.10 REF	
Overall Length	D		2.50 BSC	
Overall Width	E		2.00 BSC	
Terminal Width	b	0.60	0.65	0.70
Terminal Length	L	0.60	0.65	0.70
Terminal to Package Edge	L1	0.05	0.10	0.15
Terminal-to-Terminal	K		0.70 REF	

Notes:

1. Pin 1 visual index feature may vary, but must be located within the hatched area.
2. Package is saw singulated
3. Dimensioning and tolerancing per ASME Y14.5M
   BSC: Basic Dimension. Theoretically exact value shown without tolerances.
   REF: Reference Dimension, usually without tolerance, for information purposes only.

Microchip Technology Drawing C04-1004 Rev B Sheet 2 of 2

© 2020 Microchip Technology Inc.

© 2017 - 2026 Microchip Technology Inc. and its subsidiaries

4-Lead Very Thin Plastic Dual Flat, No Lead Package (J5A) - 2.5x2x0.9 mm Body [VDFN]
Micrel Legacy Package CDFN2520-4LD-PL-1

Note:	For the most current package drawings, please see the Microchip Packaging Specification located at http://www.microchip.com/packaging

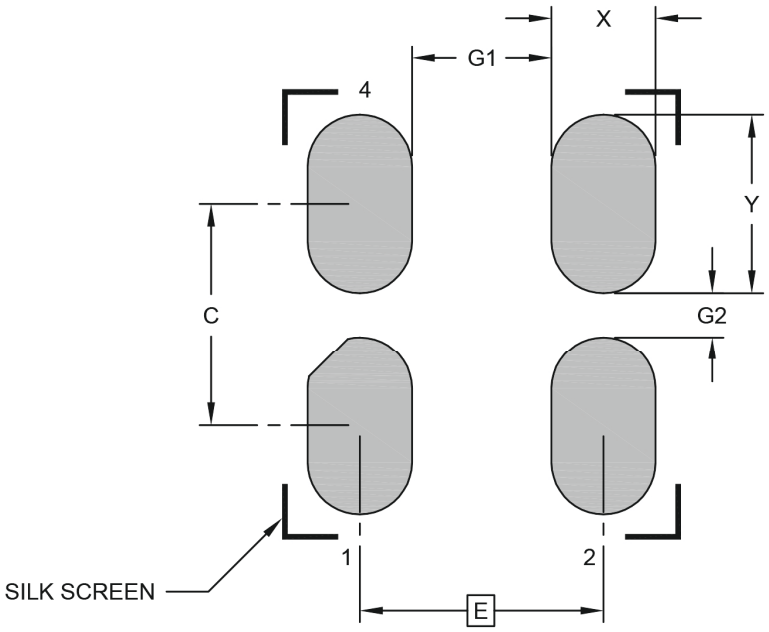

RECOMMENDED LAND PATTERN

Units		MILLIMETERS		
Dimension Limits		MIN	NOM	MAX
Contact Pitch	E		1.65 BSC	
Contact Pad Spacing	C		1.50	
Contact Pad Width (Xnn)	X			0.70
Contact Pad Length (Xnn)	Y			1.20
Contact Pad to Contact Pad (Xnn)	G1	0.95		
Contact Pad to Contact Pad (Xnn)	G2	0.30		

Notes:

1. Dimensioning and tolerancing per ASME Y14.5M
   BSC: Basic Dimension. Theoretically exact value shown without tolerances.

Microchip Technology Drawing C04-3004 Rev B

© 2020 Microchip Technology Inc.

NOTES:

© 2017 - 2026 Microchip Technology Inc. and its subsidiaries

APPENDIX A: REVISION HISTORY

Revision A (September 2017)

- Converted Micrel data sheet DSC1001 to Microchip format data sheet DS20005529A.
- Minor text changes throughout.
- Added Table 2-2 for DFN package.
- Combined Micrel data sheet DSC1003 and DSC1004 into this data sheet.
  - Updated **Section 1.0 "Electrical Characteristics"** to reflect this change.
  - Updated General Description and Features to reflect this change.

Revision B (November 2017)

- Updated V_{OH} and V_{OL} values in Table 1-1.

Revision C (July 2023)

- Updated the Package Marking Information drawing.

Revision D (June 2025)

- Added DSA10xx reference to Features and the Product Identification System sections for customers seeking AEC-Q100 qualified parts.
- Updated all Package Outline Drawings with the most current versions.

Revision E (March 2026)

- Added a note about bulk quantities to the Product Identification System section.

Revision F (July 2026)

- Added a note at the end of the Package Marking Information section about frequency marking.

© 2017 - 2026 Microchip Technology Inc. and its subsidiaries

NOTES:

© 2017 - 2026 Microchip Technology Inc. and its subsidiaries

PRODUCT IDENTIFICATION SYSTEM

To order or obtain information, e.g., on pricing or delivery, contact your local Microchip representative or sales office.

PART NO.	X	X	X	-XXX.XXXX	X
Device	Package	Temperature Range	Stability	Frequency	Package

Device:	DSC1001/3/4: 1.8V - 3.3V Low-Power Precision CMOS Oscillator (Note 1)		
Package:	A	=	4-Lead 7.0 mm x 5.0 mm VDFN
	B	=	4-Lead 5.0 mm x 3.2 mm VDFN
	C	=	4-Lead 3.2 mm x 2.5 mm VDFN
	D	=	4-Lead 2.5 mm x 2.0 mm VDFN
Temperature Range:	E	=	–20°C to +70°C (Extended Commercial)
	I	=	–40°C to +85°C (Industrial)
	L	=	–40°C to +105°C (Extended Industrial)
Stability:	1	=	±50ppm
	2	=	±25ppm
	3	=	±20 ppm
	5	=	±10 ppm
Frequency:	xxx.xxxx	=	1 MHz to 150 MHz (user-defined)
Packing Option: (Note 2)	<blank>	=	110/Tube
	T	=	1,000/Reel

Note 1: For AEC-Q100 qualified parts, please refer to the DSA10xx family.

2: On orders for bulk CPNs, product may be supplied in either cut tape (without a reel) or tube packaging, depending on availability. For Tape & Reel orders that are <1000 pieces, product may be supplied on cut tape (without a reel) depending on availability.

Examples:

a) DSC1001AE1-010.0000T:

1.8V - 3.3V Low-Power Precision CMOS Oscillator, 4-Lead 7.0 mm x 5.0 mm VDFN, Ext. Commercial Temperature Range, ±50 ppm, 10 MHz Output Frequency, 1,000/Reel

b) DSC1003BL2-030.0000:

1.8V - 3.3V Low-Power Precision CMOS Oscillator, 4-Lead 5.0 mm x 3.2 mm VDFN, Ext. Industrial Temperature Range, ±25 ppm, 30 MHz Output Frequency, 110/Tube

c) DSC1001DE5-150.0000:

1.8V - 3.3V Low-Power Precision CMOS Oscillator, 4-Lead 2.5 mm x 2.0 mm VDFN, Ext. Commercial Temperature Range, ±10 ppm, 150 MHz Output Frequency, 110/Tube

d) DSC1004AI3-075.0000T:

1.8V - 3.3V Low-Power Precision CMOS Oscillator, 4-Lead 7.0 mm x 5.0 mm VDFN, Industrial Temperature Range, ±20 ppm, 75 MHz Output Frequency, 1,000/Reel

Note 1: Tape and Reel identifier only appears in the catalog part number description. This identifier is used for ordering purposes and is not printed on the device package. Check with your Microchip Sales Office for package availability with the Tape and Reel option.

NOTES:

© 2017 - 2026 Microchip Technology Inc. and its subsidiaries

Microchip Information

Trademarks

The “Microchip” name and logo, the “M” logo, and other names, logos, and brands are registered and unregistered trademarks of Microchip Technology Incorporated or its affiliates and/or subsidiaries in the United States and/or other countries (“Microchip Trademarks”). Information regarding Microchip Trademarks can be found at https://www.microchip.com/en-us/about/legal-information/microchip-trademarks.

Legal Notice

This publication and the information herein may be used only with Microchip products, including to design, test, and integrate Microchip products with your application. Use of this information in any other manner violates these terms. Information regarding device applications is provided only for your convenience and may be superseded by updates. It is your responsibility to ensure that your application meets with your specifications. Contact your local Microchip sales office for additional support or, obtain additional support at www.microchip.com/en-us/support/design-help/client-support-services.

THIS INFORMATION IS PROVIDED BY MICROCHIP "AS IS". MICROCHIP MAKES NO REPRESENTATIONS OR WARRANTIES OF ANY KIND WHETHER EXPRESS OR IMPLIED, WRITTEN OR ORAL, STATUTORY OR OTHERWISE, RELATED TO THE INFORMATION INCLUDING BUT NOT LIMITED TO ANY IMPLIED WARRANTIES OF NON-INFRINGEMENT, MERCHANTABILITY, AND FITNESS FOR A PARTICULAR PURPOSE, OR WARRANTIES RELATED TO ITS CONDITION, QUALITY, OR PERFORMANCE.

IN NO EVENT WILL MICROCHIP BE LIABLE FOR ANY INDIRECT, SPECIAL, PUNITIVE, INCIDENTAL, OR CONSEQUENTIAL LOSS, DAMAGE, COST, OR EXPENSE OF ANY KIND WHATSOEVER RELATED TO THE INFORMATION OR ITS USE, HOWEVER CAUSED, EVEN IF MICROCHIP HAS BEEN ADVISED OF THE POSSIBILITY OR THE DAMAGES ARE FORESEEABLE. TO THE FULLEST EXTENT ALLOWED BY LAW, MICROCHIP'S TOTAL LIABILITY ON ALL CLAIMS IN ANY WAY RELATED TO THE INFORMATION OR ITS USE WILL NOT EXCEED THE AMOUNT OF FEES, IF ANY, THAT YOU HAVE PAID DIRECTLY TO MICROCHIP FOR THE INFORMATION.

Use of Microchip devices in life support and/or safety applications is entirely at the buyer's risk, and the buyer agrees to defend, indemnify and hold harmless Microchip from any and all damages, claims, suits, or expenses resulting from such use. No licenses are conveyed, implicitly or otherwise, under any Microchip intellectual property rights unless otherwise stated.

Microchip Devices Code Protection Feature

Note the following details of the code protection feature on Microchip products:

- Microchip products meet the specifications contained in their particular Microchip Data Sheet.
- Microchip believes that its family of products is secure when used in the intended manner, within operating specifications, and under normal conditions.
- Microchip values and aggressively protects its intellectual property rights. Attempts to breach the code protection features of Microchip product is strictly prohibited and may violate the Digital Millennium Copyright Act.
- Neither Microchip nor any other semiconductor manufacturer can guarantee the security of its code. Code protection does not mean that we are guaranteeing the product is “unbreakable”. Code protection is constantly evolving. Microchip is committed to continuously improving the code protection features of our products.